ASAP!

Work Order ID 101004

April-30-13 2:38:06 PM

101004

Item ID: 646.3711 **Accept** *N900040100* **Setup Start** *NS1*

Revision ID: **Stop** *NS2*

Item Name: Clip

Start Date: 4/30/13 **Start Qty:** ~~5.00~~ 10 *5* **Cust Item ID:**

Required Date: 5/10/13 **Req'd Qty:** ~~5.00~~ *5* **Customer:**

Reference:

Run Start *NR1*

Approvals: **Process Plan:** MLS **Date:** 13-05-02 **Tooling:** **Date:**

Stop *NR2*

QC: **Date:** **SPC (Y/N):** **Date:**

Sequence ID/ Work Center ID	Operation Description	Set Up/ Run Hours	Tool ID	Tool #	Plan Code	Accept Qty	Reject Qty	Reject Number	Insp. Stamp
Draw Nbr / **Revision Nbr**									
646.3700 / A									
110		0.00							
110 Waterjet	**Memo**	0.00				10	0		JM13-6-6
FLOW CNC Waterjet	1-Cut as per Dwg Dwg Rev: A Prog Rev: A								
6061-063"									
Grain Direction	2-Deburr if necessary								
120	QC2- Inspect parts off machine FAI/FAIB	0.00							
120 QC	**Memo**	0.00				10	0		JM13-6-6
Quality Control									

DQA: _____ Date: _____

NCR: Yes / No

WORK ORDER NON-CONFORMANCE / UPDATE

QA Closed: Date:

Work Order: _____

Part No. _____

NCR No. _____

DISPOSITION

- Rework ☐
- Scrap ☐
- Use-as-is ☐
- Work Order Update ☐

AGAINST DEPARTMENT/PROCESS

Skid-tube ☐	Crosstube ☐	Water Jet ☐	Engineering ☐
Machining ☐	Small Fab ☐	Prod. Eng. Coor. ☐	Quality ☐
Thermoforming ☐	Finishing ☐	Rec/Store/Packaging ☐	Other ☐
Large Fab ☐	Composite ☐	Supplier ☐	☐

Root Cause		Date	Step	Qty	Description of work order update or Non-conformance	Initial Chief Eng	Action Description	Sign & Date	Verification	QC Inspector
Doc/Data	☐									
Equip/Tooling	☐									
Operator	☐									
Material	☐									
Setup	☐									
Other	☐									
Process	☐									
Supplier	☐									
Training	☐									
Unapproved	☐									

FAULT CATEGORY

Landing Gear

- ☐ Bending
- ☐ Centre Not Concentric to O/S
- ☐ Cracks
- ☐ Crushed/Crimped
- ☐ Cuffs
- ☐ Heat Treat
- ☐ Inspection Strip in Tube
- ☐ Ripples in Bend
- ☐ Torque Waves in Extrusion
- ☐ Turning Sequence
- ☐ Wave/Twist in Tube

General

- ☐ Bend
- ☐ BOM/Route
- ☐ Broken/Damaged
- ☐ Burrs
- ☐ Contamination
- ☐ Countersink
- ☐ Cut Too Short
- ☐ Drill Holes
- ☐ Drawing
- ☐ Finish
- ☐ Folio
- ☐ Grain
- ☐ Hardware
- ☐ Inspection Incomplete
- ☐ Instructions Incomplete/Unclear
- ☐ Maintenance
- ☐ Mislabeled
- ☐ Misread
- ☐ Offset
- ☐ Out of Calibration
- ☐ Out of Sequence
- ☐ Outside Dimensions
- ☐ Ovalized
- ☐ Over/Under tolerance
- ☐ Part Incorrect
- ☐ Part Lost/Missing
- ☐ Part Moved
- ☐ Positioned Wrong
- ☐ Power Loss/Surge
- ☐ Pressure/Forced
- ☐ Temperature/Cure
- ☐ Weld
- ☐ Wrong Stock Pulled
- ☐ Other _____

Work Order ID 101004

April-30-13 2:38:06 PM

101004

Item ID: 646.3711
Revision ID:
Item Name: Clip

Accept *N900040100*

Setup Start *NS1*
Stop *NS2*

Start Date: 4/30/13 **Start Qty:** 5.00 *5*
Required Date: 5/10/13 **Req'd Qty:** 5.00 *5*
Reference:

Cust Item ID:
Customer:

Approvals: **Process Plan:** _____ **Date:** _____ **Tooling:** _____ **Date:** _____
QC: _____ **Date:** _____ **SPC (Y/N):** _____ **Date:** _____

Run Start *NR1*
Stop *NR2*

Sequence ID/ Work Center ID	Operation Description	Set Up/ Run Hours	Tool ID	Tool #	Plan Code	Accept Qty	Reject Qty	Reject Number	Insp. Stamp
130 *130* QC Quality Control	QC8- Inspect parts - second check **Memo**	0.00 0.00				10			
140 *140* Brake NC Brake NC	Form as per dwg **Memo**	0.00 0.00				10			
150 *150* QC Quality Control	QC5- Inspect part completeness to step on W/O **Memo**	0.00 0.00				10			

DQA: _____ Date: _____

NCR: Yes / No

WORK ORDER NON-CONFORMANCE / UPDATE

QA Closed: Date:

Work Order: _____

Part No. _____

NCR No. _____

DISPOSITION

- Rework ☐
- Scrap ☐
- Use-as-is ☐
- Work Order Update ☐

AGAINST DEPARTMENT/PROCESS

Skid-tube ☐	Crosstube ☐	Water Jet ☐	Engineering ☐
Machining ☐	Small Fab ☐	Prod. Eng. Coor. ☐	Quality ☐
Thermoforming ☐	Finishing ☐	Rec/Store/Packaging ☐	Other ☐
Large Fab ☐	Composite ☐	Supplier ☐	☐

Root Cause		Date	Step	Qty	Description of work order update or Non-conformance	Initial Chief Eng	Action Description	Sign & Date	Verification	QC Inspector
Doc/Data	☐									
Equip/Tooling	☐									
Operator	☐									
Material	☐									
Setup	☐									
Other	☐									
Process	☐									
Supplier	☐									
Training	☐									
Unapproved	☐									

FAULT CATEGORY

Landing Gear

- ☐ Bending
- ☐ Centre Not Concentric to O/S
- ☐ Cracks
- ☐ Crushed/Crimped
- ☐ Cuffs
- ☐ Heat Treat
- ☐ Inspection Strip in Tube
- ☐ Ripples in Bend
- ☐ Torque Waves in Extrusion
- ☐ Turning Sequence
- ☐ Wave/Twist in Tube

General

- ☐ Bend
- ☐ BOM/Route
- ☐ Broken/Damaged
- ☐ Burrs
- ☐ Contamination
- ☐ Countersink
- ☐ Cut Too Short
- ☐ Drill Holes
- ☐ Drawing
- ☐ Finish
- ☐ Folio
- ☐ Grain
- ☐ Hardware
- ☐ Inspection Incomplete
- ☐ Instructions Incomplete/Unclear
- ☐ Maintenance
- ☐ Mislabeled
- ☐ Misread
- ☐ Offset
- ☐ Out of Calibration
- ☐ Out of Sequence
- ☐ Outside Dimensions
- ☐ Ovalized
- ☐ Over/Under tolerance
- ☐ Part Incorrect
- ☐ Part Lost/Missing
- ☐ Part Moved
- ☐ Positioned Wrong
- ☐ Power Loss/Surge
- ☐ Pressure/Forced
- ☐ Temperature/Cure
- ☐ Weld
- ☐ Wrong Stock Pulled
- ☐ Other _____

Work Order ID 101004

April-30-13 2:38:06 PM

101004

Item ID: 646.3711
Revision ID:
Item Name: Clip
Start Date: 4/30/13 **Start Qty:** 5.00 *5*
Required Date: 5/10/13 **Req'd Qty:** 5.00 *5*
Reference:

Accept *N900040100*

Setup Start *NS1*
Stop *NS2*

Cust Item ID:
Customer:

Run Start *NR1*
Stop *NR2*

Approvals: **Process Plan:** _____ **Date:** _____ **Tooling:** _____ **Date:** _____
QC: _____ **Date:** _____ **SPC (Y/N):** _____ **Date:** _____

Sequence ID/ Work Center ID	Operation Description	Set Up/ Run Hours	Tool ID	Tool #	Plan Code	Accept Qty	Reject Qty	Reject Number	Insp. Stamp
160	Outsource process-Anodize per QSI017 4.1.10.1	0.00							
160 Outsource4		2/0.20116				CL 13/06/07			(10)
Outsource process - Anodize	**Memo**	0.00							
	HARD ANODIZE, COLOR BLACK AS PER DWG.(SEE NOTE 2)								
170	Receive & Inspect for Damage & Mat'l Certs	0.00							
170 Packaging							3/4/19		(10)
Packaging	**Memo**	0.00							
180	QC5- Inspect part completeness to step on W/O	0.00							
180 QC		N/A							
Quality Control	**Memo**	0.00							

DQA: _____ Date: _____

NCR: Yes / No

WORK ORDER NON-CONFORMANCE / UPDATE

QA Closed: Date:

Work Order: _____

Part No. _____

NCR No. _____

DISPOSITION

- Rework ☐
- Scrap ☐
- Use-as-is ☐
- Work Order Update ☐

AGAINST DEPARTMENT/PROCESS

Skid-tube ☐	Crosstube ☐	Water Jet ☐	Engineering ☐
Machining ☐	Small Fab ☐	Prod. Eng. Coor. ☐	Quality ☐
Thermoforming ☐	Finishing ☐	Rec/Store/Packaging ☐	Other ☐
Large Fab ☐	Composite ☐	Supplier ☐	☐

Root Cause		Date	Step	Qty	Description of work order update or Non-conformance	Initial Chief Eng	Action Description	Sign & Date	Verification	QC Inspector
Doc/Data	☐									
Equip/Tooling	☐									
Operator	☐									
Material	☐									
Setup	☐									
Other	☐									
Process	☐									
Supplier	☐									
Training	☐									
Unapproved	☐									

FAULT CATEGORY

Landing Gear

- ☐ Bending
- ☐ Centre Not Concentric to O/S
- ☐ Cracks
- ☐ Crushed/Crimped
- ☐ Cuffs
- ☐ Heat Treat
- ☐ Inspection Strip in Tube
- ☐ Ripples in Bend
- ☐ Torque Waves in Extrusion
- ☐ Turning Sequence
- ☐ Wave/Twist in Tube

General

- ☐ Bend
- ☐ BOM/Route
- ☐ Broken/Damaged
- ☐ Burrs
- ☐ Contamination
- ☐ Countersink
- ☐ Cut Too Short
- ☐ Drill Holes
- ☐ Drawing
- ☐ Finish
- ☐ Folio
- ☐ Grain
- ☐ Hardware
- ☐ Inspection Incomplete
- ☐ Instructions Incomplete/Unclear
- ☐ Maintenance
- ☐ Mislabeled
- ☐ Misread
- ☐ Offset
- ☐ Out of Calibration
- ☐ Out of Sequence
- ☐ Outside Dimensions
- ☐ Ovalized
- ☐ Over/Under tolerance
- ☐ Part Incorrect
- ☐ Part Lost/Missing
- ☐ Part Moved
- ☐ Positioned Wrong
- ☐ Power Loss/Surge
- ☐ Pressure/Forced
- ☐ Temperature/Cure
- ☐ Weld
- ☐ Wrong Stock Pulled
- ☐ Other

_____

_____

_____

Work Order ID 101004

April-30-13 2:38:06 PM

101004

Item ID: 646.3711
Revision ID:
Item Name: Clip

Accept *N900040100*

Setup Start *NS1*
Stop *NS2*

Start Date: 4/30/13 **Start Qty:** 5.00 *5*
Required Date: 5/10/13 **Req'd Qty:** 5.00 *5*
Reference:

Cust Item ID:
Customer:

Run Start *NR1*
Stop *NR2*

Approvals: **Process Plan:** _____ **Date:** _____ **Tooling:** _____ **Date:** _____
QC: _____ **Date:** _____ **SPC (Y/N):** _____ **Date:** _____

Sequence ID/ Work Center ID	Operation Description	Set Up/ Run Hours	Tool ID	Tool #	Plan Code	Accept Qty	Reject Qty	Reject Number	Insp. Stamp
190		0.00							
190 SprayPaint						CZ 13/06/20			
Spray Painting	**Memo**	0.00							
	PRIME IAW MIL-P-23377J TYPE1 CLASS N AS PER DWG. (SEE NOTE 2)								
	BATCH: 125452								
200	QC14- Inspect Spray Paint	0.00				10			
200 QC						~~10X~~		~~SP~~	
Quality Control	**Memo**	0.00 13 6 21						~~13-6-20~~	
210	Identify as per dwg & Stock Location: ST535	0.00							
210 Packaging						10X		SP	
Packaging	**Memo**	0.00						13-6-20	
	IDENTIFY AS PER APICAL MPP-120 BY STAMPING P# AND REV								

DQA: _____ Date: _____

NCR: Yes / No

WORK ORDER NON-CONFORMANCE / UPDATE

QA Closed: Date:

Work Order: _____

Part No. _____

NCR No. _____

DISPOSITION

- Rework ☐
- Scrap ☐
- Use-as-is ☐
- Work Order Update ☐

AGAINST DEPARTMENT/PROCESS

Skid-tube ☐	Crosstube ☐	Water Jet ☐	Engineering ☐
Machining ☐	Small Fab ☐	Prod. Eng. Coor. ☐	Quality ☐
Thermoforming ☐	Finishing ☐	Rec/Store/Packaging ☐	Other ☐
Large Fab ☐	Composite ☐	Supplier ☐	☐

Root Cause		Date	Step	Qty	Description of work order update or Non-conformance	Initial Chief Eng	Action Description	Sign & Date	Verification	QC Inspector
Doc/Data	☐									
Equip/Tooling	☐									
Operator	☐									
Material	☐									
Setup	☐									
Other	☐									
Process	☐									
Supplier	☐									
Training	☐									
Unapproved	☐									

FAULT CATEGORY

Landing Gear

- ☐ Bending
- ☐ Centre Not Concentric to O/S
- ☐ Cracks
- ☐ Crushed/Crimped
- ☐ Cuffs
- ☐ Heat Treat
- ☐ Inspection Strip in Tube
- ☐ Ripples in Bend
- ☐ Torque Waves in Extrusion
- ☐ Turning Sequence
- ☐ Wave/Twist in Tube

General

- ☐ Bend
- ☐ BOM/Route
- ☐ Broken/Damaged
- ☐ Burrs
- ☐ Contamination
- ☐ Countersink
- ☐ Cut Too Short
- ☐ Drill Holes
- ☐ Drawing
- ☐ Finish
- ☐ Folio
- ☐ Grain
- ☐ Hardware
- ☐ Inspection Incomplete
- ☐ Instructions Incomplete/Unclear
- ☐ Maintenance
- ☐ Mislabeled
- ☐ Misread
- ☐ Offset
- ☐ Out of Calibration
- ☐ Out of Sequence
- ☐ Outside Dimensions
- ☐ Ovalized
- ☐ Over/Under tolerance
- ☐ Part Incorrect
- ☐ Part Lost/Missing
- ☐ Part Moved
- ☐ Positioned Wrong
- ☐ Power Loss/Surge
- ☐ Pressure/Forced
- ☐ Temperature/Cure
- ☐ Weld
- ☐ Wrong Stock Pulled
- ☐ Other _____

Work Order ID 101004

April-30-13 2:38:06 PM

101004

Item ID: 646.3711

Revision ID:

Item Name: Clip

Accept *N900040100*

Setup **Start** *NS1*

Stop *NS2*

Start Date: 4/30/13 **Start Qty:** 5.00 *5*

Required Date: 5/10/13 **Req'd Qty:** 5.00 *5*

Reference:

Cust Item ID:

Customer:

Run **Start** *NR1*

Stop *NR2*

Approvals: **Process Plan:** _____ **Date:** _____ **Tooling:** _____ **Date:** _____

QC: _____ **Date:** _____ **SPC (Y/N):** _____ **Date:** _____

Sequence ID/ Work Center ID	Operation Description	Set Up/ Run Hours	Tool ID	Tool #	Plan Code	Accept Qty	Reject Qty	Reject Number	Insp. Stamp
220	QC21- Final Inspection - Work Order Release	0.00							
220 QC Quality Control	Memo	0.00				MLJ		13-06-21	

pl 13-04-20

DQA: _____ Date: _____

NCR: Yes / No

WORK ORDER NON-CONFORMANCE / UPDATE

QA Closed: Date:

Work Order: _____

Part No. _____

NCR No. _____

DISPOSITION

- Rework ☐
- Scrap ☐
- Use-as-is ☐
- Work Order Update ☐

AGAINST DEPARTMENT/PROCESS

Skid-tube ☐	Crosstube ☐	Water Jet ☐	Engineering ☐
Machining ☐	Small Fab ☐	Prod. Eng. Coor. ☐	Quality ☐
Thermoforming ☐	Finishing ☐	Rec/Store/Packaging ☐	Other ☐
Large Fab ☐	Composite ☐	Supplier ☐	☐

Root Cause		Date	Step	Qty	Description of work order update or Non-conformance	Initial Chief Eng	Action Description	Sign & Date	Verification	QC Inspector
Doc/Data	☐									
Equip/Tooling	☐									
Operator	☐									
Material	☐									
Setup	☐									
Other	☐									
Process	☐									
Supplier	☐									
Training	☐									
Unapproved	☐									

FAULT CATEGORY

Landing Gear

- ☐ Bending
- ☐ Centre Not Concentric to O/S
- ☐ Cracks
- ☐ Crushed/Crimped
- ☐ Cuffs
- ☐ Heat Treat
- ☐ Inspection Strip in Tube
- ☐ Ripples in Bend
- ☐ Torque Waves in Extrusion
- ☐ Turning Sequence
- ☐ Wave/Twist in Tube

General

- ☐ Bend
- ☐ BOM/Route
- ☐ Broken/Damaged
- ☐ Burrs
- ☐ Contamination
- ☐ Countersink
- ☐ Cut Too Short
- ☐ Drill Holes
- ☐ Drawing
- ☐ Finish
- ☐ Folio
- ☐ Grain
- ☐ Hardware
- ☐ Inspection Incomplete
- ☐ Instructions Incomplete/Unclear
- ☐ Maintenance
- ☐ Mislabeled
- ☐ Misread
- ☐ Offset
- ☐ Out of Calibration
- ☐ Out of Sequence
- ☐ Outside Dimensions
- ☐ Ovalized
- ☐ Over/Under tolerance
- ☐ Part Incorrect
- ☐ Part Lost/Missing
- ☐ Part Moved
- ☐ Positioned Wrong
- ☐ Power Loss/Surge
- ☐ Pressure/Forced
- ☐ Temperature/Cure
- ☐ Weld
- ☐ Wrong Stock Pulled
- ☐ Other _____

Picklist Print

April-30-13 2:38:06 PM

Work Order ID: **101004**

Parent Item: **646.3711** **Start Date:** 4/30/13 **Required Date:** 5/10/13

Parent Item Name: Clip **Start Qty:** 5.00 **Required Qty:** 5.00

Comments: IPP REV:A 12.11.23 NEW ISSUE DD VERF:JLM

Component Item ID/ Item Name	Replacement Item ID	Mfg/ Purch	Bin Item	Primary Location	Last Location	Route Seq ID	Unit of Measure	Qty on Hand	Qty per Kit	Total Qty	Qty Issued	Date Issued	Status
M6061T6S.063 6061-T6 .063 Sheet		Purchased	No			110	sf	503.1125	**0.036**	~~0.1894735~~ 0.25			JM 3.6.6

Location	Loc Qty	Loc Code
MAT021	503.1125	
123135	120.5625	
124003	86	124003
125431	296.55	

DQA: _____ Date: _____

NCR: Yes / No

WORK ORDER NON-CONFORMANCE / UPDATE

QA Closed: Date:

Work Order: _____

Part No. _____

NCR No. _____

DISPOSITION

- Rework ☐
- Scrap ☐
- Use-as-is ☐
- Work Order Update ☐

AGAINST DEPARTMENT/PROCESS

- Skid-tube ☐
- Machining ☐
- Thermoforming ☐
- Large Fab ☐
- Crosstube ☐
- Small Fab ☐
- Finishing ☐
- Composite ☐
- Water Jet ☐
- Prod. Eng. Coor. ☐
- Rec/Store/Packaging ☐
- Supplier ☐
- Engineering ☐
- Quality ☐
- Other ☐

Root Cause		Date	Step	Qty	Description of work order update or Non-conformance	Initial Chief Eng	Action Description	Sign & Date	Verification	QC Inspector
Doc/Data	☐									
Equip/Tooling	☐									
Operator	☐									
Material	☐									
Setup	☐									
Other	☐									
Process	☐									
Supplier	☐									
Training	☐									
Unapproved	☐									

FAULT CATEGORY

Landing Gear

- ☐ Bending
- ☐ Centre Not Concentric to O/S
- ☐ Cracks
- ☐ Crushed/Crimped
- ☐ Cuffs
- ☐ Heat Treat
- ☐ Inspection Strip in Tube
- ☐ Ripples in Bend
- ☐ Torque Waves in Extrusion
- ☐ Turning Sequence
- ☐ Wave/Twist in Tube

General

- ☐ Bend
- ☐ BOM/Route
- ☐ Broken/Damaged
- ☐ Burrs
- ☐ Contamination
- ☐ Countersink
- ☐ Cut Too Short
- ☐ Drill Holes
- ☐ Drawing
- ☐ Finish
- ☐ Folio
- ☐ Grain
- ☐ Hardware
- ☐ Inspection Incomplete
- ☐ Instructions Incomplete/Unclear
- ☐ Maintenance
- ☐ Mislabeled
- ☐ Misread
- ☐ Offset
- ☐ Out of Calibration
- ☐ Out of Sequence
- ☐ Outside Dimensions
- ☐ Ovalized
- ☐ Over/Under tolerance
- ☐ Part Incorrect
- ☐ Part Lost/Missing
- ☐ Part Moved
- ☐ Positioned Wrong
- ☐ Power Loss/Surge
- ☐ Pressure/Forced
- ☐ Temperature/Cure
- ☐ Weld
- ☐ Wrong Stock Pulled
- ☐ Other _____

APICAL INDUSTRIES, INC.	ENGINEERING CHANGE NOTICE NO. 03702				SHEET 1 OF
	DWG NO. 646.3700	REV: A	PREPARED BY B. PETERS	DATE: 11/15/12	EFFECT L ☐ INC. ☒
	DWG TITLE: SHEETMETAL				
	APPROVED BY: ENGR	MFG	QC		EFF: NEXT ORDER
TRANSACTION CODES (TC): A-ADD C-CREATE R-REVISE D-DELETE	REASON: ADDED ALTERNATE MATERIAL AND REVISED REFERENCE DIMENSIONS				ECR: D-12-010

SHEET 1, ZONE A2 IS:

IS

⚠ PRIMARY MATERIAL: ALUMINUM 6061-T6 PER AMS-QQ-A-250/11
ALTERNATE MATERIAL: SS 17-4 PH PER AMS 5604

SHEET 7, ZONE B1 IS:

IS

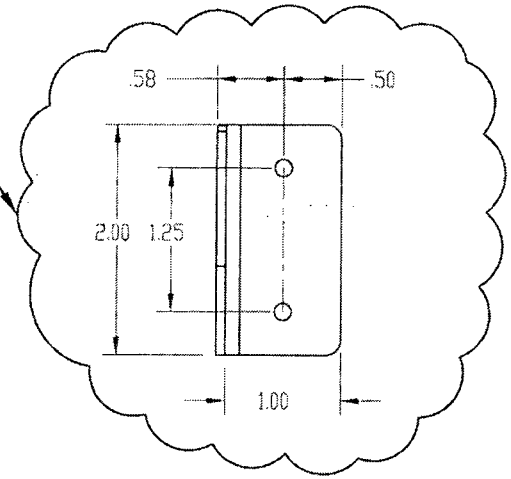

101004 MCJ
13-05-02

F/N	TC	PART NUMBER	QTY	DESCRIPTION	MATERIAL	SPECIFICATION

DOCUMENTS EFFECTED: ☐ RFMS ☐ MDL ☐ INSTALL INSTRUC ☐ ICA ☐ BOM	CHANGE CATEGORY ☐ MAJOR ☒ MINOR	DER REVIEW REQUIRED ☐ YES ☒ NO

101004

APICAL INDUSTRIES, INC.	ENGINEERING CHANGE ORDER NO. 03702	SHEET 2 OF 2

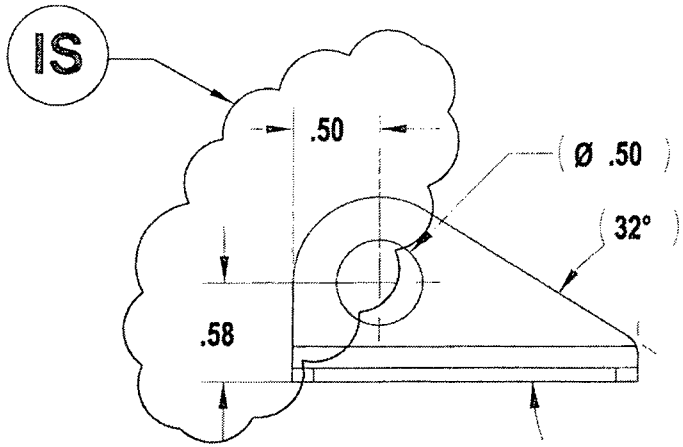

SHEET 7, ZONE C4 IS:

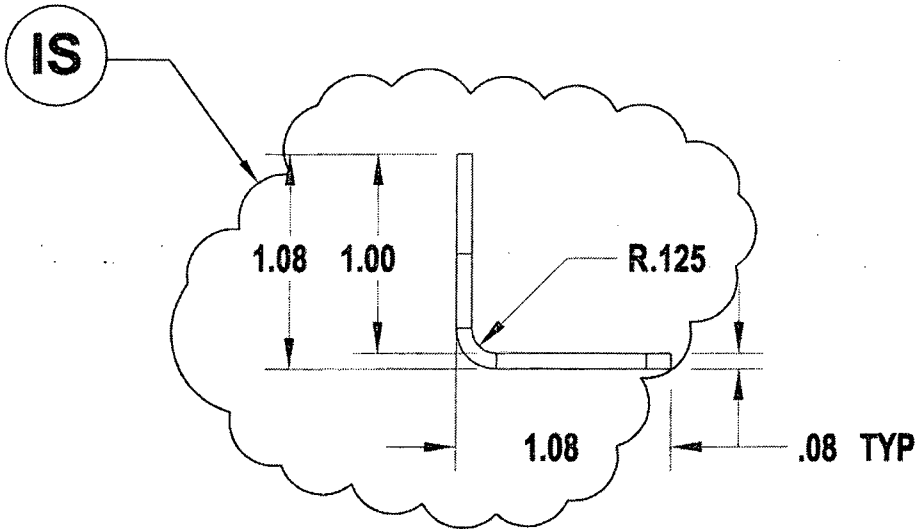

SHEET 7, ZONE D1 IS:

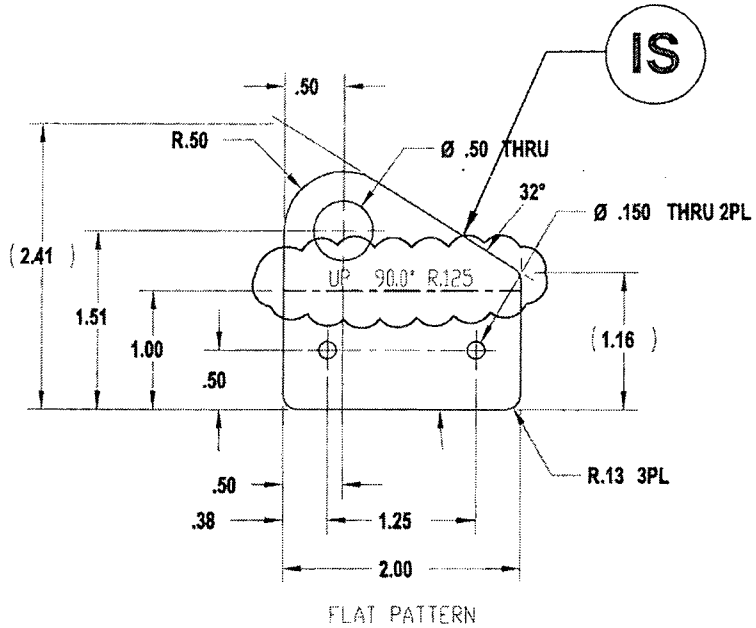

SHEET 7, ZONE B7 IS:

F/N	TC	PART NUMBER	QTY	DESCRIPTION	MATERIAL/SPECIFICATION

101004

1. MATERIAL: ALUMINUM 6061-T6 PER AMS-QQ-A-250/11
2. FINISH: HARD ANODIZE IAW MIL-A-8625 TYPE III CLASS 2, COLOR BLACK; CARDINAL 4860-50 PRETREATMENT PRIMER PRIME IAW MIL-P-23377J TYPE I CLASS N
3. MATERIAL: 17-4 PH AMS 5604, CONDITION H900
4. FINISH: PRIME IAW MIL-P-23377J TYPE I CLASS N
5. DEBURR AND BREAK ALL SHARP EDGES
6. IDENTIFY IAW MPP-120

646.3710

UNINCORPORATED ECN(s)

03702

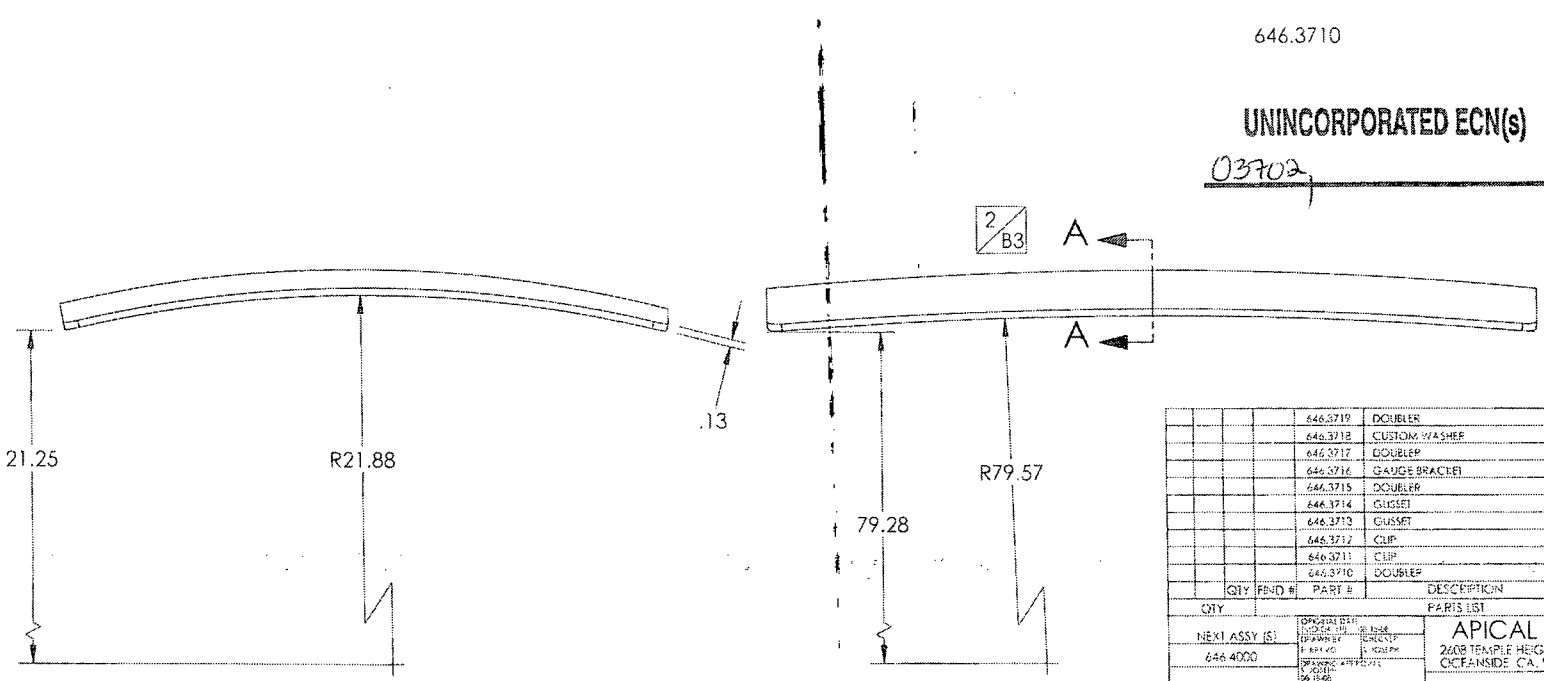

QTY	FIND #	PART #	DESCRIPTION	MAT'L	SPEC.
		646.3719	DOUBLER		
		646.3718	CUSTOM WASHER		
		646.3717	DOUBLER		
		646.3716	GAUGE BRACKET		
		646.3715	DOUBLER		
		646.3714	GUSSET		
		646.3713	GUSSET		
		646.3712	CLIP		
		646.3711	CLIP		
		646.3710	DOUBLER		

PARTS LIST

NEXT ASSY (S): 646.4000

APICAL INDUSTRIES
2608 TEMPLE HEIGHTS DR.
OCEANSIDE CA. 92056-3512 (760)724-5300

SHEETMETAL

SIZE B | CAGE CODE 07MZ6 | DWG. NO. 646.3700 | REV A

SCALE: NONE | SHEET 1 OF 9

101004

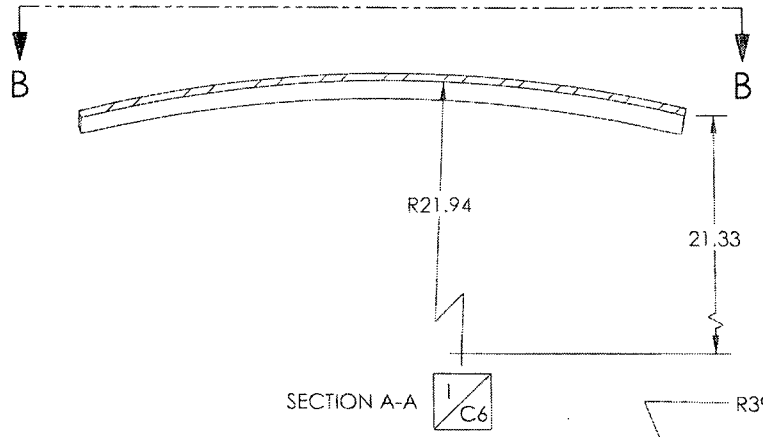

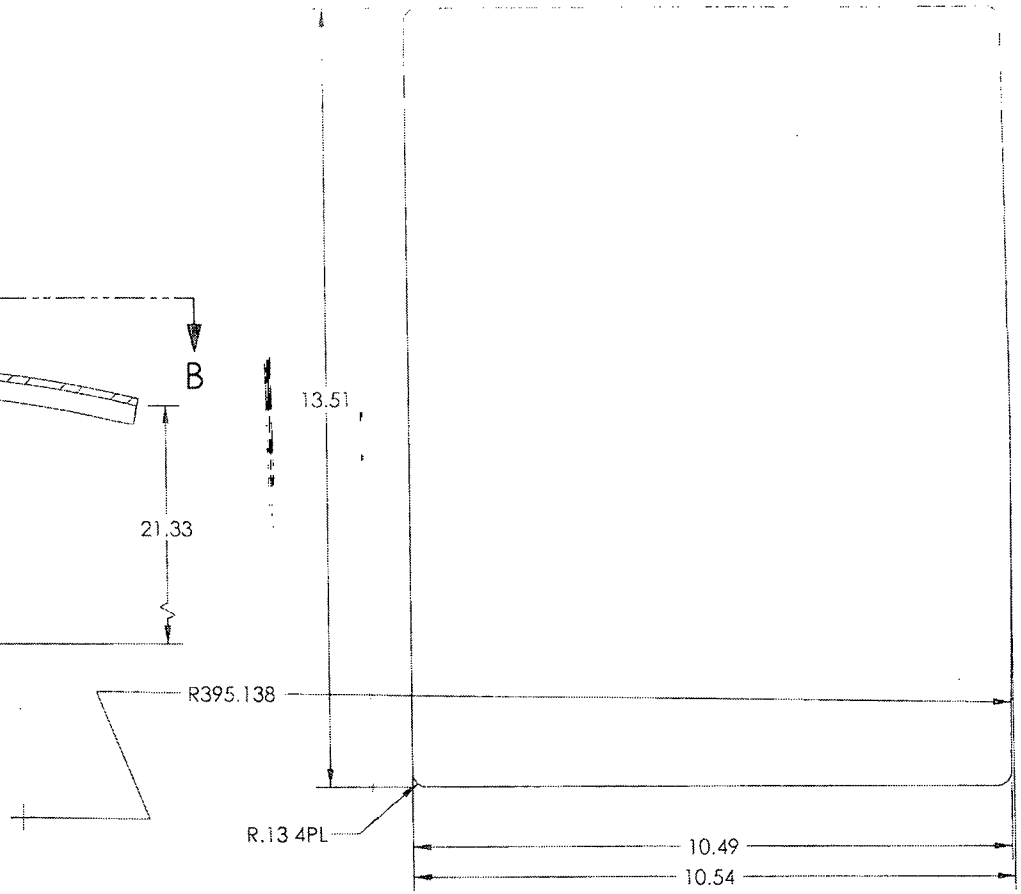

SECTION B-B

ORIGINAL DATE	APICAL INDUSTRIES 2608 TEMPLE HEIGHTS DR. OCEANSIDE, CA 92056-3512 (760)724-5300
DRAWN BY: C. CRIPP	
APPROVED: S. JOSEPH	SHEETMETAL
UNLESS OTHERWISE SPECIFIED DIMENSIONS ARE IN INCHES TOLERANCES ARE 2 PLACE DECIMAL ±.01 3 PLACE DECIMAL ±.005 ANGLES ± 5°	SIZE B · CAGE CODE 07426 · DWG NO 646.3700 · REV A SCALE NONE · SHEET 2 OF 9

101004

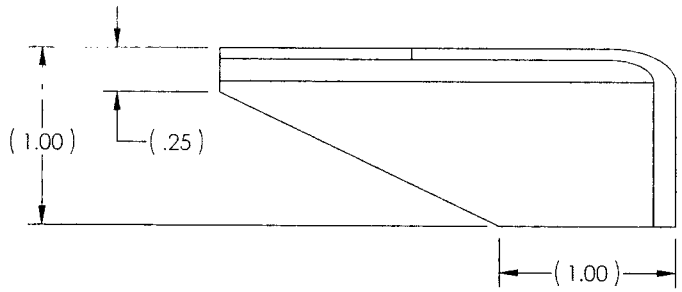

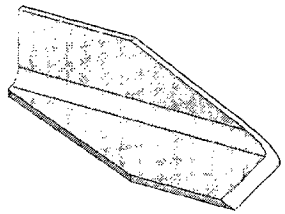

Grain Direction

646.3711 SHOWN
646.3712 OPPOSITE

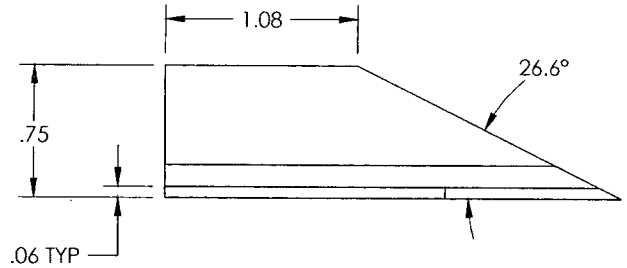

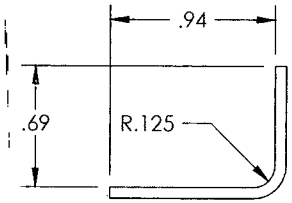

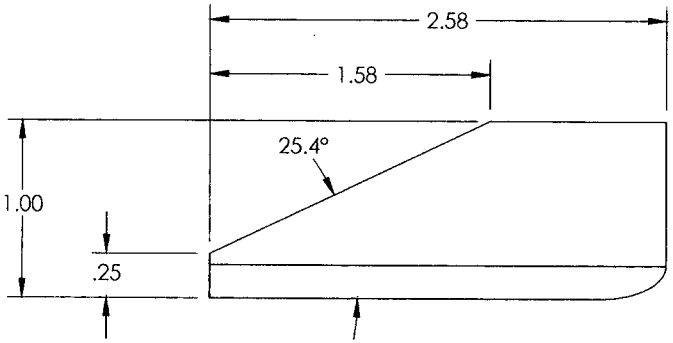

NEXT ASSY (S)	ORIGINAL DATE (DA-MO-YR) 08-18-08	APICAL INDUSTRIES
	DRAWN BY P. BRAVO / CHECKER C. JOSEPH	2608 TEMPLE HEIGHTS DR. OCEANSIDE, CA. 92056-3512 (760)724-5300
	DRAWING APPROVAL S. JOSEPH 08-18-08	SHEETMETAL
	CONTRACT No.	
	UNLESS OTHERWISE SPECIFIED DIMENSIONS ARE IN INCHES TOLERANCES ARE: 2 PLACE DECIMALS ±.01 3 PLACE DECIMALS ±.005 ANGLES ± .5°	SIZE B / CAGE CODE 07MZ6 / DWG. NO. 646.3700 / REV. A
		SCALE: NONE / SHEET 3 OF 9

101004

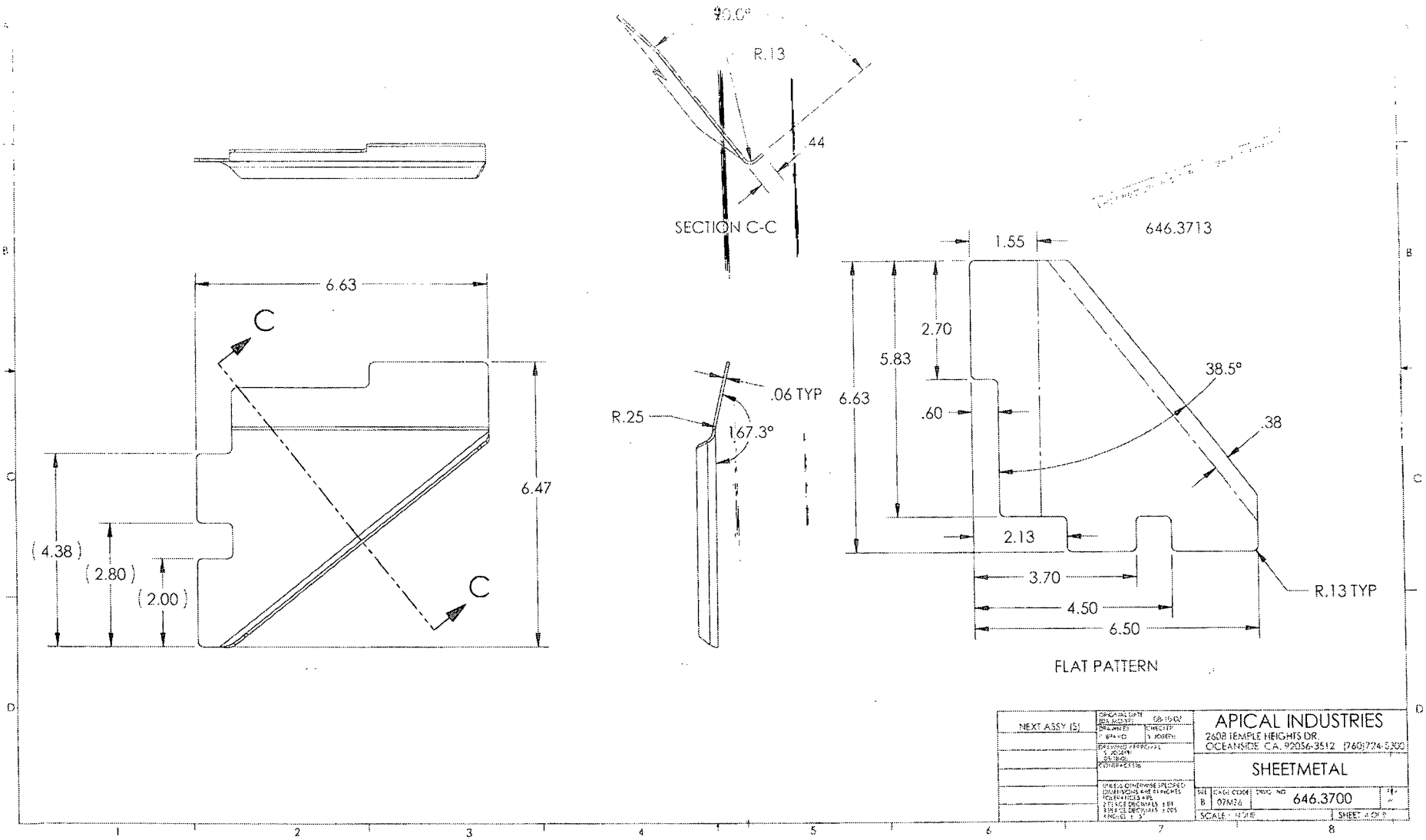
90.0°
R.13
.44
SECTION C-C
646.3713
6.63
C
C
6.47
(4.38)
(2.80)
(2.00)
.06 TYP
R.25
167.3°
1.55
2.70
5.83
6.63
.60
38.5°
.38
2.13
3.70
4.50
6.50
R.13 TYP
FLAT PATTERN
NEXT ASSY (S)
APICAL INDUSTRIES
2608 TEMPLE HEIGHTS DR.
OCEANSIDE CA. 92056-3512 (760)724-5300
SHEETMETAL
646.3700
B
07M26

101004

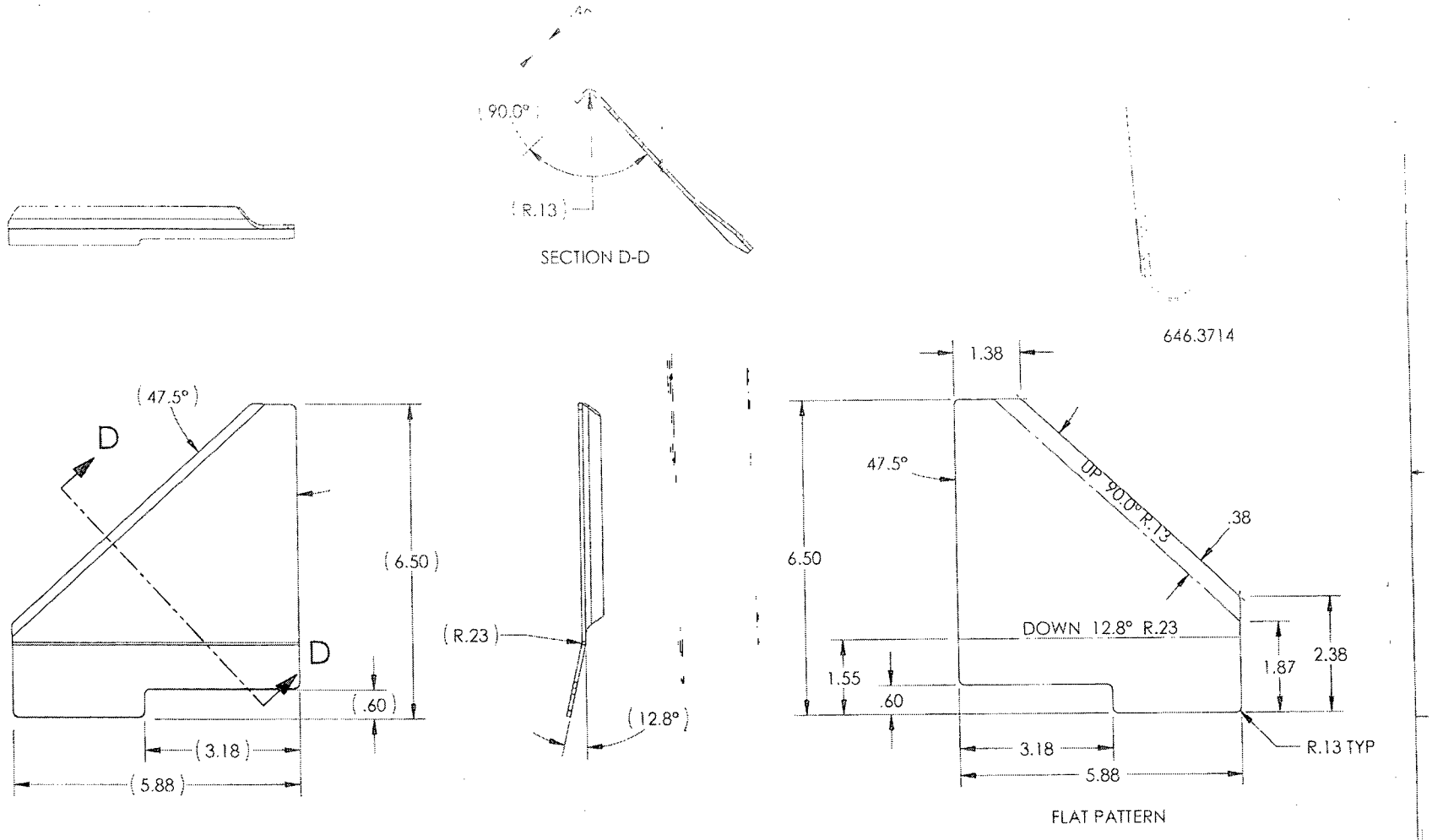

APICAL INDUSTRIES
2608 TEMPLE HEIGHTS DR
OCEANSIDE, CA. 92056-3512 (760)724-5300

SHEETMETAL

B 07MZ6 646.3700

SCALE: NONE SHEET 5 OF 9

10004

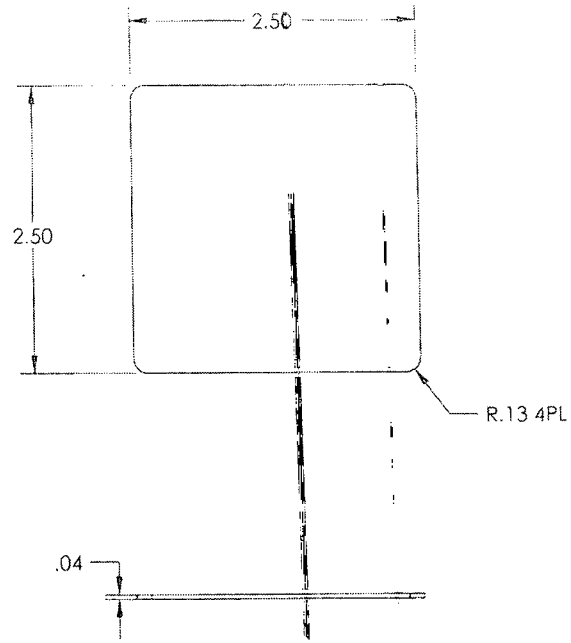

646.3715

NEXT ASSY (S)	ORIGINAL DATE 06-16-08	APICAL INDUSTRIES
	DRAWN BY P. BRAVO	2608 TEMPLE HEIGHTS DR. OCEANSIDE, CA. 92056-3512 (760)724-5300
	CHECKED BY S. JOSEPH	
	DRAWING APPROVAL S. JOSEPH 06-16-08	SHEETMETAL
	CONTRACT NO	
	UNLESS OTHERWISE SPECIFIED DIMENSIONS ARE IN INCHES TOLERANCES ARE 2 PLACE DECIMALS ± .01 3 PLACE DECIMALS ± .005 ANGLES ± .5°	SIZE B · CAGE CODE 07M26 · DWG NO 646.3700 · REV A · SCALE: NONE · SHEET 1 OF 1

101004

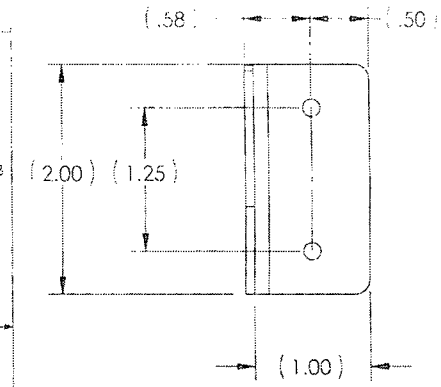

646.3716

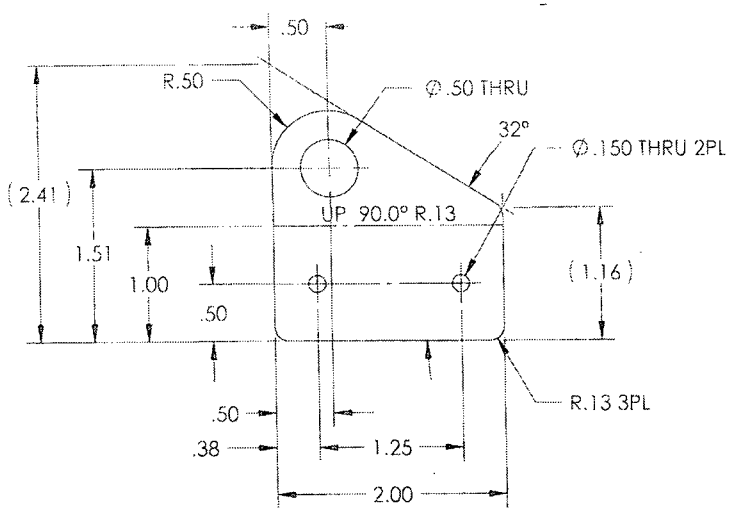

FLAT PATTERN

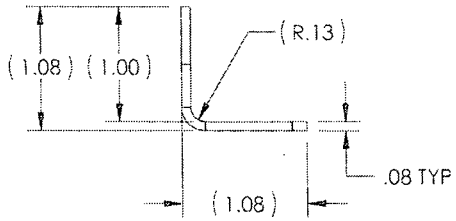

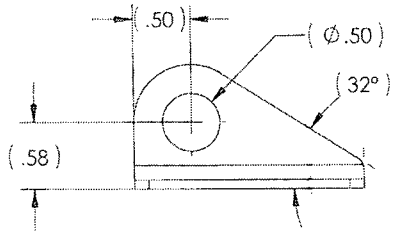

NEXT ASSY (S)		APICAL INDUSTRIES 2608 TEMPLE HEIGHTS DR. OCEANSIDE, CA. 92056-3512 (760)724-5300
		SHEETMETAL
		SIZE B · CAGE CODE 07A76 · DWG NO 646.3700 · REV F
		SCALE NONE · SHEET 1 OF 1

101004

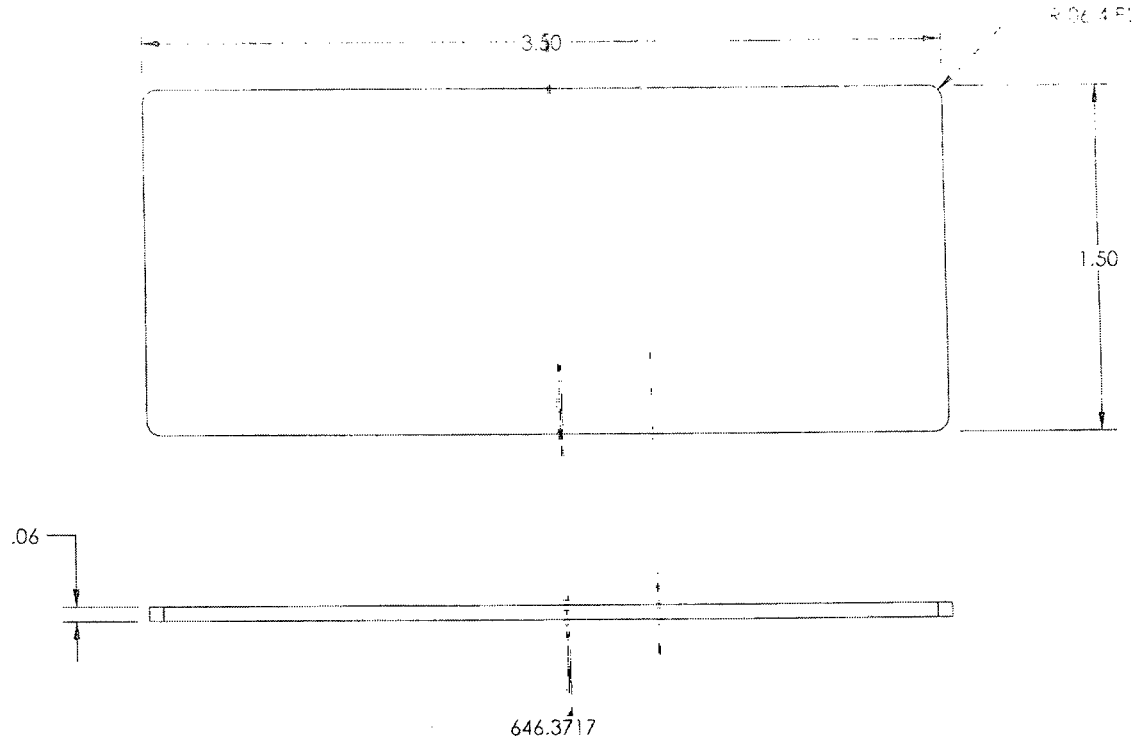

NEXT ASSY (S)	ORIGINAL DATE (DD-MO-YR) 06-15-08	APICAL INDUSTRIES
	DRAWN BY P. SPRAYCO / CHECKED S. JOSEPH	2608 TEMPLE HEIGHTS DR. OCEANSIDE, CA. 92056-3512 (760)724-5300
	DRAWING APPROVAL S. JOSEPH 05-15-08	SHEETMETAL
	CONTRACT NO	
	UNLESS OTHERWISE SPECIFIED DIMENSIONS ARE IN INCHES TOLERANCES ARE 2 PLACE DECIMALS ±.01 3 PLACE DECIMALS ±.005 ANGLES ± 2°	SIZE B CAGE CODE 07M26 DWG NO 646.3700 REV 1.0 SCALE 1:1 SHEET 1 OF 1

101004

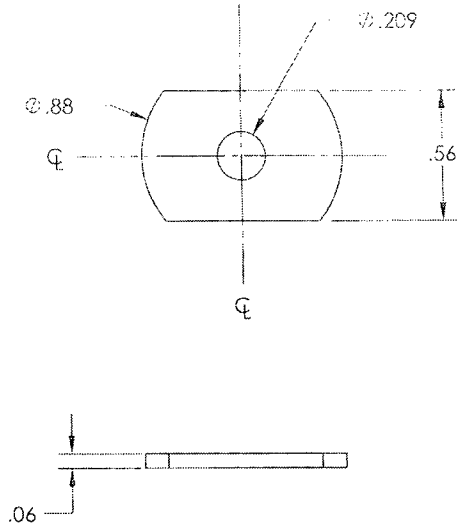

646.3718

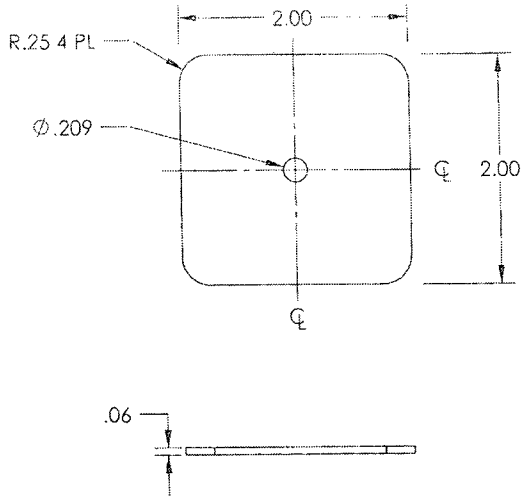

646.3719

NEXT ASSY (S)	ORIGINAL DATE 05-18-06	APICAL INDUSTRIES 2608 TEMPLE HEIGHTS DR. OCEANSIDE, CA. 92056-3512 (760)724-5300
	DRAWN BY P. BRAVO	SHEETMETAL
	UNLESS OTHERWISE SPECIFIED DIMENSIONS ARE IN INCHES TOLERANCES ARE 2 PLACE DECIMAL ±.01 3 PLACE DECIMAL ±.005 ANGLES ± 5°	SIZE B · CAGE CODE 071626 · DWG NO 646.3700 · REV A SCALE: NONE · SHEET 1 OF 1

B C D

1 2 3 4 5 6 7 8

DART AEROSPACE LTD	Work Order:	101004
Description: Clip	Part Number:	646-3711
Inspection Dwg: 646-3700 Rev: A		Page 1 of 1

FIRST ARTICLE INSPECTION CHECKLIST

Drawing Dimension	Tolerance	Actual Dimension	Accept	Reject	Method of Inspection	Comments
1.08"	+/- 0.010	1.08"	-		V	JKmod
2.58"	+/- 0.010	2.58"	-		V	
1.58"	+/- 0.010	1.59"	-		V	
0.063"	+/- 0.010	0.060"	-		V	

Measured by:	JM	Audited by:	DAU 27	Preliminary Approval:	
Date:	13-6-6	Date:	13 6-6	Date:	

Rev	Date	Change	Revised by	Approved
E	10.04.14	Added preliminary approval	KJ	

10.04.15

A.T.G. Industries Inc.
731, rue Industrielle Rd.
PLATING DEPARTMENT
Rockland, On K4K 1T2
Canada
Ph: (613) 446-4544
Fax: (613) 446-4556

ATG INDUSTRIES INC.

Pack List

Number: 62447 Date: 17-Jun-13

To

DART AEROSPACE LTD
1270 ABERDEEN ST.
HAWKESBURY, ON K6A 1K7
Canada

Ph: 613-632-5200 Fax: 613-632-1185

Ship To

DART AEROSPACE LTD
1270 ABERDEEN ST.
HAWKESBURY, ON K6A 1K7
Canada

Ph: 613-632-5200 Fax: 613-632-1185

Terms	Ship Via

Quantity	Description
1 lot	Part: ASST Rev: 30 PCS 646.3711 b 22 PCS 646.3713 30 PCS 646.3716 10 PCS 646.3712 HARD ANODIZE BLACK MIL-A-8625 TYPE III CLASS 2 PRIME MIL-P-23377J TYPE I CLASS N Job: 20130365 PO: 20116 Line:
	Certificate of Conformance A.T.G. Industries certifies that all items in this shipment are in conformance with all requirements, specifications and drawings referenced in the purchase order. ISO 9001 : 2008 REGISTERED ATG SALES-2010 TERMS APPLY DATE : 17/6/13 CERTIFIED SIGNATURE : M RECEIVER SIGNATURE : _____